WOK ROUND FIRE & WATER BOWL

38-3/4 IN · GFRC CONCRETE FIRE & WATER BOWL · 1 SIZE

Specification sheet

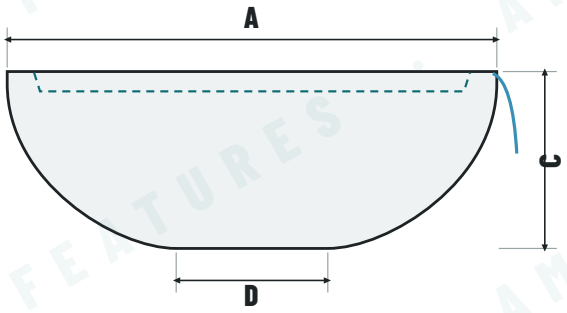

FRONT VIEW

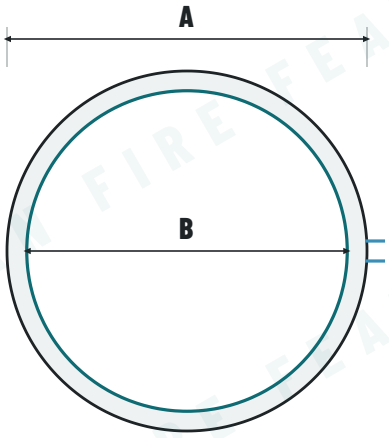

TOP VIEW

MODEL	A · OUTER	B · OPENING	C · HEIGHT	D · BASE	BURNER PAN	BURNER	BTU	WEIGHT
WRFWB39	38-3/4"	34-1/2"	14"	12"	33"	18" fire ring	162,000	225 lbs

SPECIFICATIONS

MATERIAL	Glass fiber reinforced concrete (GFRC), made by Fire by Design
FUEL	Natural gas or propane
IGNITION	Match lit (key valve) or electronic (AWEIS 24V)
WATER	Fire/water bowl spillway kit included. Pump and plumbing by others
FIRE MEDIA	Not included. Lava rock or fire glass sold separately
LEAD TIME	Built to order. Ships in about 6 to 8 weeks

FINISHES · 11 CONCRETE BOWL COLORS

LAND GREY · NATURAL GREY · DEEP NATURAL GREY · DOVE WHITE · GREIGE · SAND

CHOCOLATE · WALNUT · PENNY · OBSIDIAN · CHARCOAL

INCLUDED

- Concrete vessel in the color you pick
- Stainless steel burner and burner pan (sizes in the table)
- Gas inlet with NG orifice or LP air mixer
- Match lit: key valve and flex gas lines
- Electronic: AWEIS ignition, 24V transformer, flex line
- Fire/water spillway kit

NOTES

- All dimensions in inches, nominal. Hand-cast concrete varies slightly piece to piece.
- Drawings show shape only and are not to scale. Use the table for sizes.
- Confirm critical dimensions with us before you build a base, cut an opening or run gas.
- Installation by a licensed gas technician, following local codes.

© 2026 American Fire Features · Original document · Doc ID AFF-FBD-WRFWB39-2611 · Unauthorized copying or reproduction prohibited · © 2026 American Fire Features · Original document · Doc ID AFF-FBD-WRFWB39-2611 · Unauthorized copying or reproduction prohibited · © 2026 American Fire Features · Original document · Doc ID AFF-FBD