LEGACY SQUARE FIRE & WATER BOWL

30 · 36 · 42 IN · GFRC CONCRETE FIRE & WATER BOWL · 3 SIZES

Specification sheet

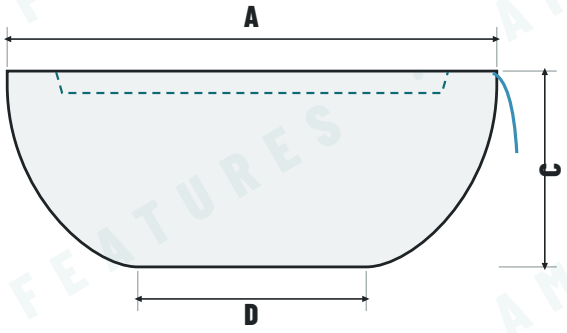

FRONT VIEW

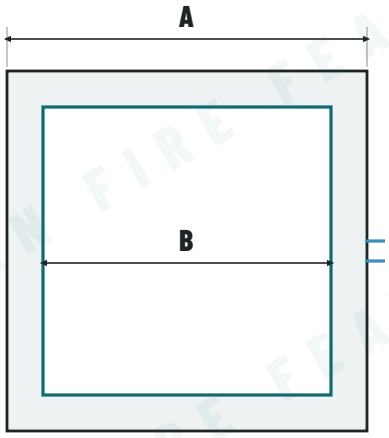

TOP VIEW

MODEL	A · OUTER	B · OPENING	C · HEIGHT	D · BASE	BURNER PAN	BURNER	BTU	WEIGHT
APLSQFWB30	30″	24″	12″	14″	23-1/2″	12″ fire ring	85,000	145 lbs
APLSQFWB36	36″	TBC	15″	17″	29-1/4″	18″ fire ring	162,000	230 lbs
APLSQFWB42	42″	36″	18″	20″	36″	24″ fire ring	170,000	290 lbs

SPECIFICATIONS

MATERIAL	GFRC concrete, hand-cast in the USA by ArchPot for Fire by Design
FUEL	Natural gas or propane
IGNITION	Match lit (key valve) or electronic (AWEIS 24V)
WATER	Fire/water bowl spillway kit included. Pump and plumbing by others
FIRE MEDIA	Not included. Lava rock or fire glass sold separately
LEAD TIME	Built to order. Ships in about 6 to 8 weeks

FINISHES · 22 ARCHPOT CONCRETE FINISHES

MORNING FOG · RAIN CLOUD · EVENING STORM · EUREKA · ROCKSLIDE · CRYSTAL COVE · CORONADO · BLACK

WHITE · DARK WALNUT · URBAN SLATE · ENGLISH LEAD · COBALT BLUE · BEECHWOOD · KHAKI · SEQUOIA

DEEP AMBER · BURNT TERRA COTTA · TERRA COTTA · TUSCAN WASH · NATURAL STONE · LIMESTONE

INCLUDED

- Concrete vessel in the color you pick
- Stainless steel burner and burner pan (sizes in the table)
- Gas inlet with NG orifice or LP air mixer
- Match lit: key valve and flex gas lines
- Electronic: AWEIS ignition, 24V transformer, flex line
- Fire/water spillway kit

NOTES

- All dimensions in inches, nominal. Hand-cast concrete varies slightly piece to piece.
- Drawings show shape only and are not to scale. Use the table for sizes.
- Confirm critical dimensions with us before you build a base, cut an opening or run gas.
- TBC = being confirmed with the manufacturer. Ask us for the confirmed figure.
- Installation by a licensed gas technician, following local codes.

© 2026 American Fire Features · Original document · Doc ID AFF-FBD-APLSQFWB30-2611 · Unauthorized copying or reproduction prohibited · © 2026 American Fire Features · Original document · Doc ID AFF-FBD-APLSQFWB30-2611 · Unauthorized copying or reproduction prohibited · © 2026 American Fire Features · Original document · Doc ID AF