LEGACY ROUND FIRE ON WATER BOWL

30 · 36 · 42 IN · GFRC CONCRETE FIRE ON WATER BOWL · 3 SIZES

Specification sheet

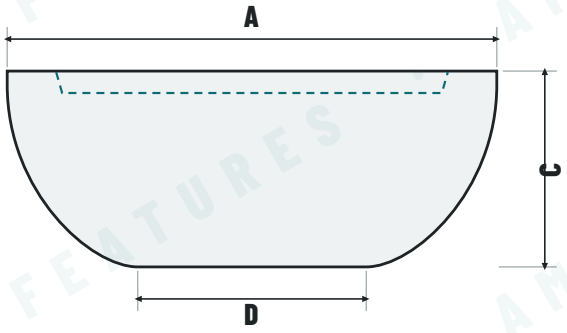

FRONT VIEW

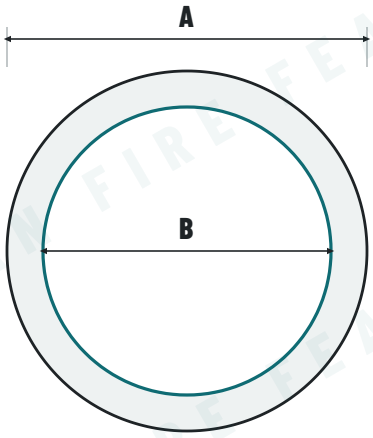

TOP VIEW

MODEL	A · OUTER	B · OPENING	C · HEIGHT	D · BASE	BURNER	BTU	WEIGHT
APLRWB30	30″	24″	12″	14″	9″ water burner	67,000	120 lbs
APLRWB36	36″	30″	15″	17″	9″ water burner	67,000	150 lbs
APLRWB42	42″	36″	18″	20″	12″ water burner	91,000	200 lbs

SPECIFICATIONS

MATERIAL	GFRC concrete, hand-cast in the USA by ArchPot for Fire by Design
FUEL	Natural gas or propane
IGNITION	Electronic only: SUBEIS 24V fire-on-water system
WATER	Submersible water burner and scupper spillway. Keep water at the water line shown
FIRE MEDIA	Not included. Lava rock or fire glass sold separately
LEAD TIME	Built to order. Ships in about 6 to 8 weeks

FINISHES · 22 ARCHPOT CONCRETE FINISHES

MORNING FOG · RAIN CLOUD · EVENING STORM · EUREKA · ROCKSLIDE · CRYSTAL COVE · CORONADO · BLACK

WHITE · DARK WALNUT · URBAN SLATE · ENGLISH LEAD · COBALT BLUE · BEECHWOOD · KHAKI · SEQUOIA

DEEP AMBER · BURNT TERRA COTTA · TERRA COTTA · TUSCAN WASH · NATURAL STONE · LIMESTONE

INCLUDED

- Concrete vessel in the color you pick
- Stainless steel burner and burner pan (sizes in the table)
- SUBEIS ignition, fire-on-water pilot assembly, 24V transformer
- Water scupper spillway

NOTES

- All dimensions in inches, nominal. Hand-cast concrete varies slightly piece to piece.
- Drawings show shape only and are not to scale. Use the table for sizes.
- Confirm critical dimensions with us before you build a base, cut an opening or run gas.
- Installation by a licensed gas technician, following local codes.

© 2026 American Fire Features · Original document · Doc ID AFF-FBD-APLRWB30-2611 · Unauthorized copying or reproduction prohibited · © 2026 American Fire Features · Original document · Doc ID AFF-FBD-APLRWB30-2611 · Unauthorized copying or reproduction prohibited · © 2026 American Fire Features · Original document · Doc ID AFF-FB